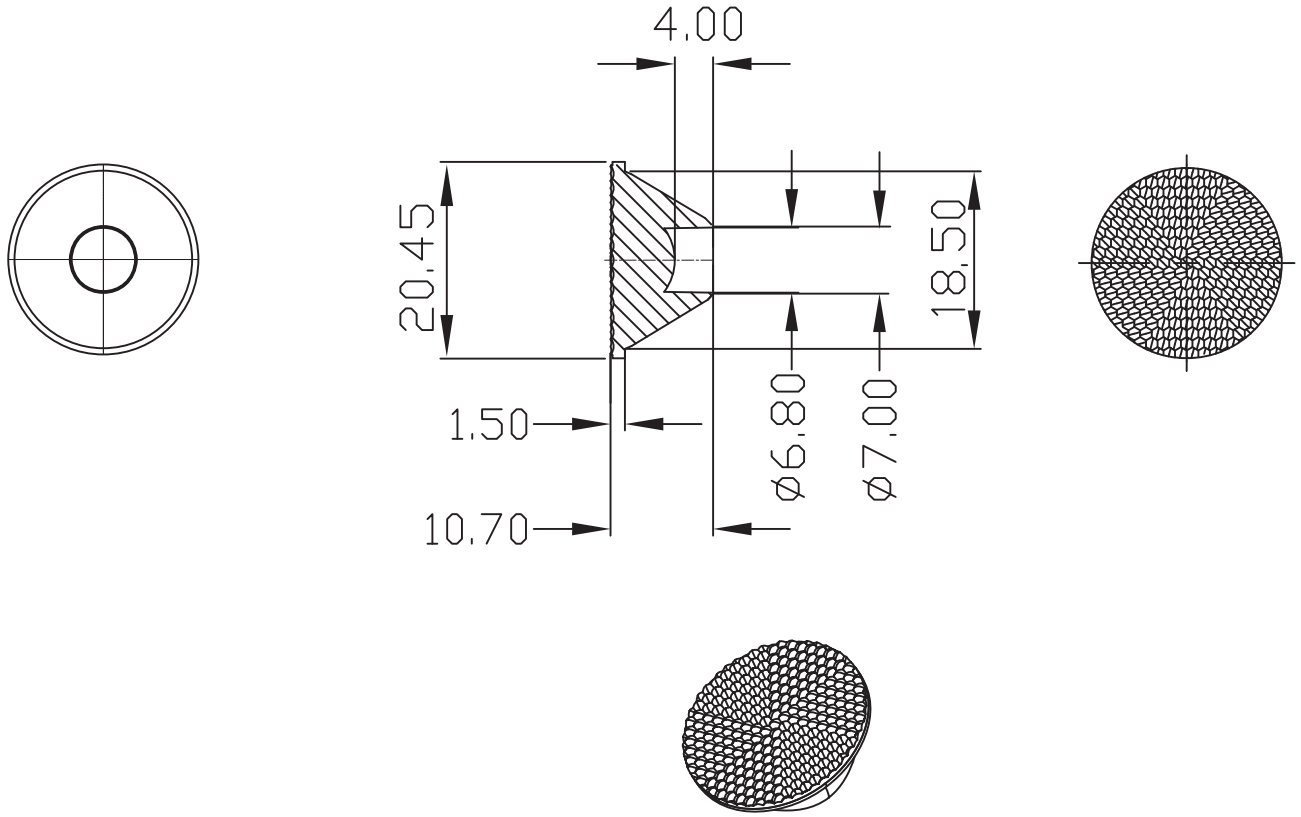

Technical Note:

1. Products have no edges, shrinkage, watermarks and other defects
2. Mirror polished standard;SPI-A1
3. The tolerance of the unremarked sizd is ±0.10

變更記事													
						PART		顏色 COLOR			SCALE		深圳百康光电有限公司 SHENZHEN BAIKANG OPTICAL CO;LTD
						~ 5	±0.03	材質 MATERIAL	PMMA		UNIT	mm	
						5 ~ 10	±0.05						
						10 ~ 20	±0.10	設計 DESING	陈峥	08/11/16	SIZE	A4	料號 PART NO.
						20 ~ 30	±0.15						
	1	08/11/16	NEW	——	——	30 ~	±0.20	審核 CHECK			SHEET		品名 TITLE:
						Angle	± 1°						
	版次 REV	日期 DATE	變更說明 MODIFICATION DESCRIPTION	變更 CHANGE	核准 APPROVE	DIM	TOL	核准 APPROVE			PROJ.		圖號 DRAWING NO. BK-LED-1R19S